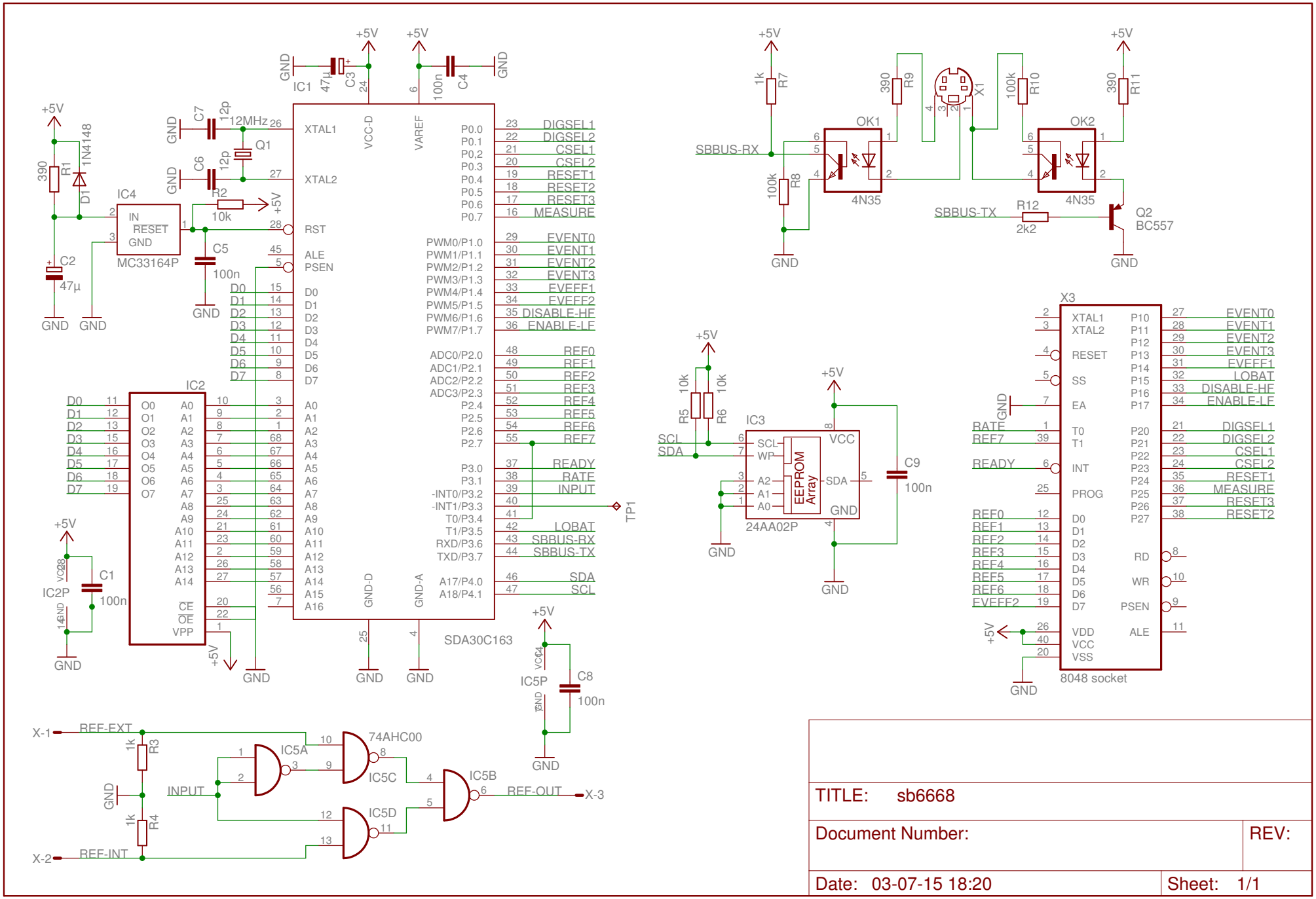
IC1
SDA30C163
IC2
IC2P
IC3
24AA02P
EEPROM Array
IC4
MC33164P
IC5A
IC5B
IC5C
IC5D
IC5P
74AHC00
OK1
OK2
4N35
X1
X3
8048 socket
Q1
Q2
BC557
12MHz
1N4148
SBBUS-RX
SBBUS-TX
REF-EXT
REF-INT
INPUT
REF-OUT
X-1
X-2
X-3
TP1
+5V
GND
TITLE: sb6668
Document Number:
REV:
Date: 03-07-15 18:20
Sheet: 1/1